SJ 56 • Traveling Shaft Type [축승강형]

상방향형 Upright Traveling

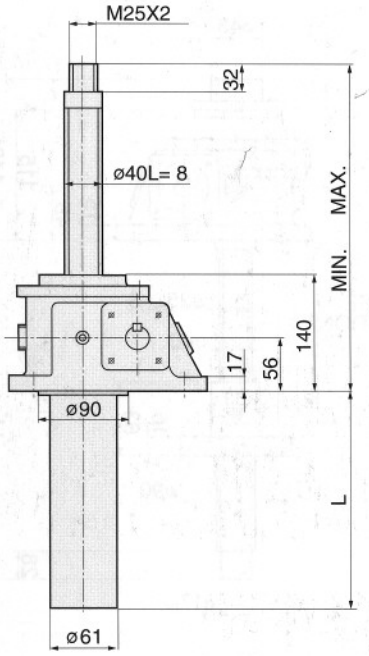

보호카바 Dustproof Bellow

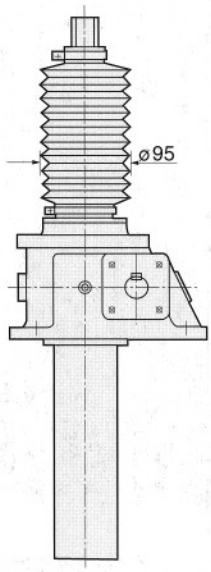

하방향형 Inverted Traveling

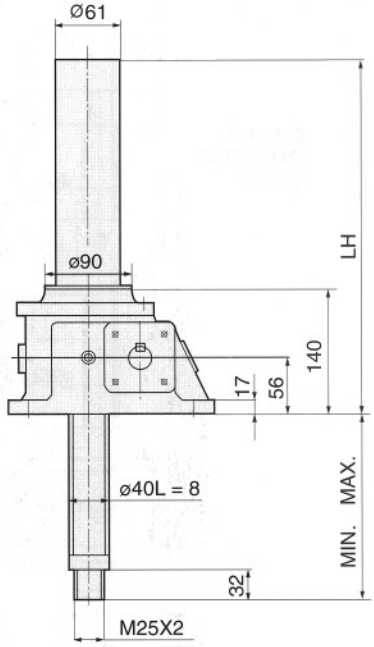

평면도 Plane Figure

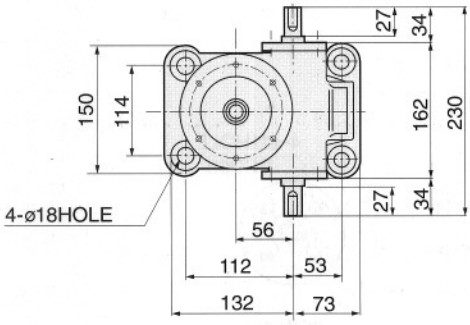

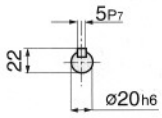

Dimension of Screw Nut

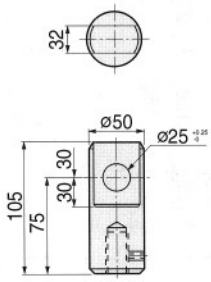

크레비스 너트 Clevis Nut

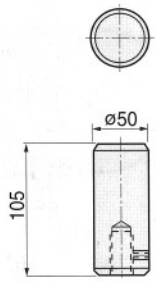

플레인 너트 Plain Nut

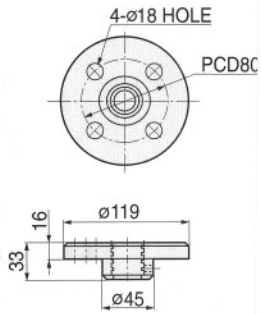

플렌지 너트 Flange Nut

SJ56 Screw Jack

행정 STROKE	U 상방향형 (Upright Type)										I 하방향형 (Inverted Type)									
	N 회전방지키없음 (Prevent key Not Included)					k 회전방지키있음 (Prevent key Provided)					N 회전방지키없음 (Prevent key Not Included)					k 회전방지키있음 (Prevent key Provided)				
	N축보호카바없음 N: No Dustproof Cover		B축보호카바부착 B: Dustproof Cover		L	N축보호카바없음 N: No Dustproof Cover		B축보호카바부착 B:Dustproof Cover		L	N축보호카바없음 N: No Dustproof Cover		B축보호카바부착 B: Dustproof Cover		LH	N축보호카바없음 N: No Dustproof Cover		B축보호카바부착 B: Dustproof Cover		LH
	MIN	MAX	MIN	MAX		MIN	MAX	MIN	MAX		MIN	MAX	MIN	MAX		MIN	MAX	MIN	MAX	
100	180	280	245	320	160	180	280	245	320	160	50	150	90	190	285	50	150	90	190	285
200	180	380	245	420	260	180	380	245	420	260	50	250	90	290	385	50	250	90	290	385
300	180	480	250	550	360	180	480	250	550	360	50	350	125	425	485	50	350	125	425	485
400	180	580	250	650	460	180	580	250	650	460	50	450	125	525	585	50	450	125	525	585
500	180	680	250	750	560	180	680	250	750	560	50	550	125	625	685	50	550	125	625	685
600	180	780	290	890	660	180	780	290	890	660	50	650	165	765	785	50	650	165	765	785
800	180	980	290	1090	860	180	980	290	1090	860	50	850	165	965	985	50	850	165	965	985