SJ95 • Traveling Shaft Type (축승강형)

상방향형 Upright Traveling

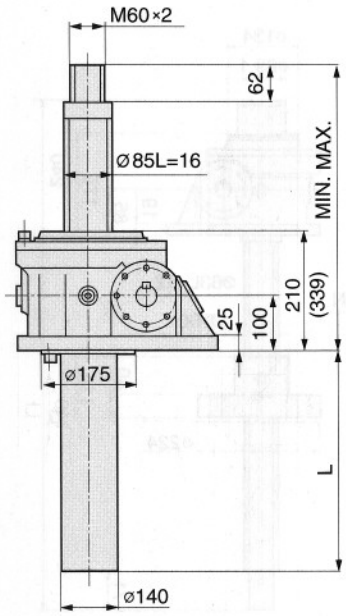

보호카바 Dustproof Bellow

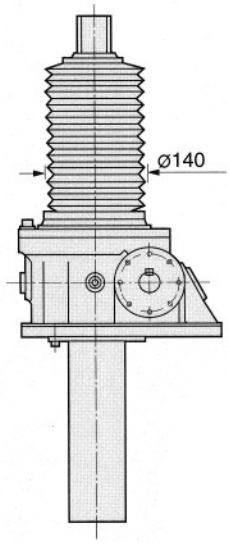

하방향형 Inverted Traveling

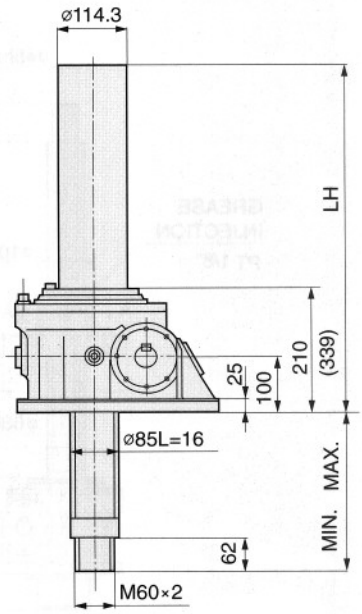

( ) : 회전방지키 설치시

평면도 Plane Figure

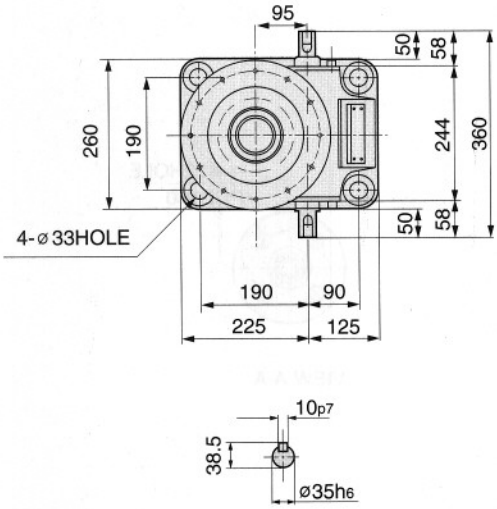

Dimension of Screw Nut

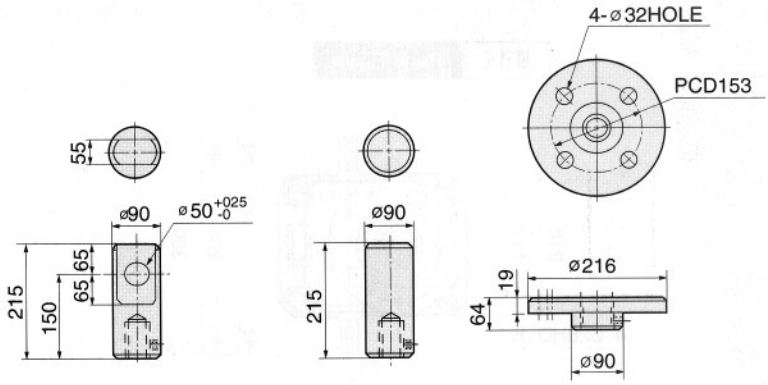

크레비스 너트 Clevis Nut **플레인 너트 Plain Nut** **플렌지 너트 Flange Nut**

SJ95 Screw Jack

행정 STROKE	U 상방향형 (Upright Type)												I 하방향형 (Inverted Type)											
	N 회전방지키없음 (Prevent key Not Included)						k 회전방지키있음 (Prevent key Provided)						N 회전방지키없음 (Prevent key Not Included)						k 회전방지키있음 (Prevent key Provided)					
	N축보호카바없음 N: No Dustproof Cover			B축보호카바부착 B:Dustproof Cover			N축보호카바없음 N: No Dustproof Cover			B축보호카바부착 B:Dustproof Cover			N축보호카바없음 N: No Dustproof Cover			B축보호카바부착 B:Dustproof Cover			N축보호카바없음 N: No Dustproof Cover			B축보호카바부착 B:Dustproof Cover		
	MIN	MAX	L	MIN	MAX	L	MIN	MAX	L	MIN	MAX	L	MIN	MAX	LH	MIN	MAX	LH	MIN	MAX	LH	MIN	MAX	LH
100	280	380	175	335	435	175	410	510	175	465	565	175	70	170	385	125	225	385	70	170	514	125	225	514
200	280	480	275	335	535	275	410	610	275	465	665	275	70	270	485	125	325	485	70	270	614	125	325	614
300	280	580	375	370	670	375	410	710	375	500	800	375	70	370	585	160	460	585	70	370	714	160	460	714
400	280	680	475	370	770	475	410	810	475	500	900	475	70	470	658	160	560	685	70	470	814	160	560	814
500	280	780	575	370	870	575	410	910	575	500	1000	575	70	570	785	160	660	785	70	570	914	160	660	914
600	280	880	675	410	1010	675	410	1010	675	540	1140	675	70	670	885	200	800	885	70	670	1014	200	800	1014
800	280	1080	875	410	1210	875	410	1210	875	540	1340	875	70	870	1085	200	1000	1085	70	870	1214	200	1000	1214